Turboheat
Wood fire ducted heating

Information Booklet

For Your Turboheat Product.

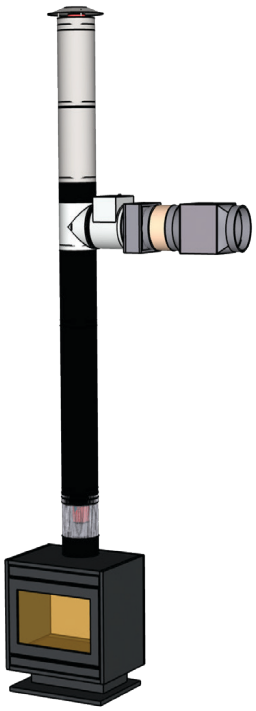

Turboheat Freestanding System

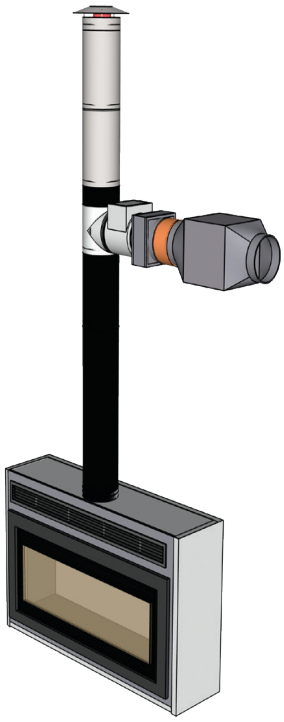

Turboheat Inbuilt System

Turboheat
3/2 Glenville Drive, Melton Victoria 3337
Ph: 03 8088 0348
Email: admin@turboheat.net.au

Turboheat

Turboheat - *What is TURBOHEAT?*

Turboheat is a ducted heating system from a solid fuel heater. Turboheat is a patented heating system and is independently tested and complies to all relevant AS/NZL standards. By capturing and utilising the excess radiant heat from the active flue pipe to heat the air within the Turboheat "Heat exchanger" it then distributes it throughout your whole home.

It is durable and designed for functionality and safety above all else, it has been and always will be our highest priority. Full compliance with regulatory requirements is paramount and we adhere to them. (AS/NZL appendix F 2918 and AS/NZ 4012/4013 2014)

The Turboheat system is made to resist high temperatures and has thermal insulation between the heat exchange casing, which is twin walled for protection against excess heat on the outer casing. The main flue exchanger is made of the highest 316/304 grade stainless steel which extends the length of the flue and through the ceiling and roof to the cowl.

Turboheat has a specially designed and unique control unit. This diagnoses both heat and air temperature for ease of operation enabling you to maintain the heated air at specific comfortable temperatures and flows.

This concept also communicates to the innovative fan system which maintains a constant heat being pumped throughout the home. The Turboheat fan system is ‘state of the art’ and provides a 86% power efficiency to that of a standard fan system of 60%-70%. This enables a huge 800litres/sec air movement through 8-12 outlets.

This fan system is so power efficient that the design complements those homes which are using solar or wind technologies, for off grid. Again, setting Turboheat apart from all other systems. Turboheat’s unique patented design has been specifically directed at lowering the carbon footprint whilst heating the whole home.

Turboheat

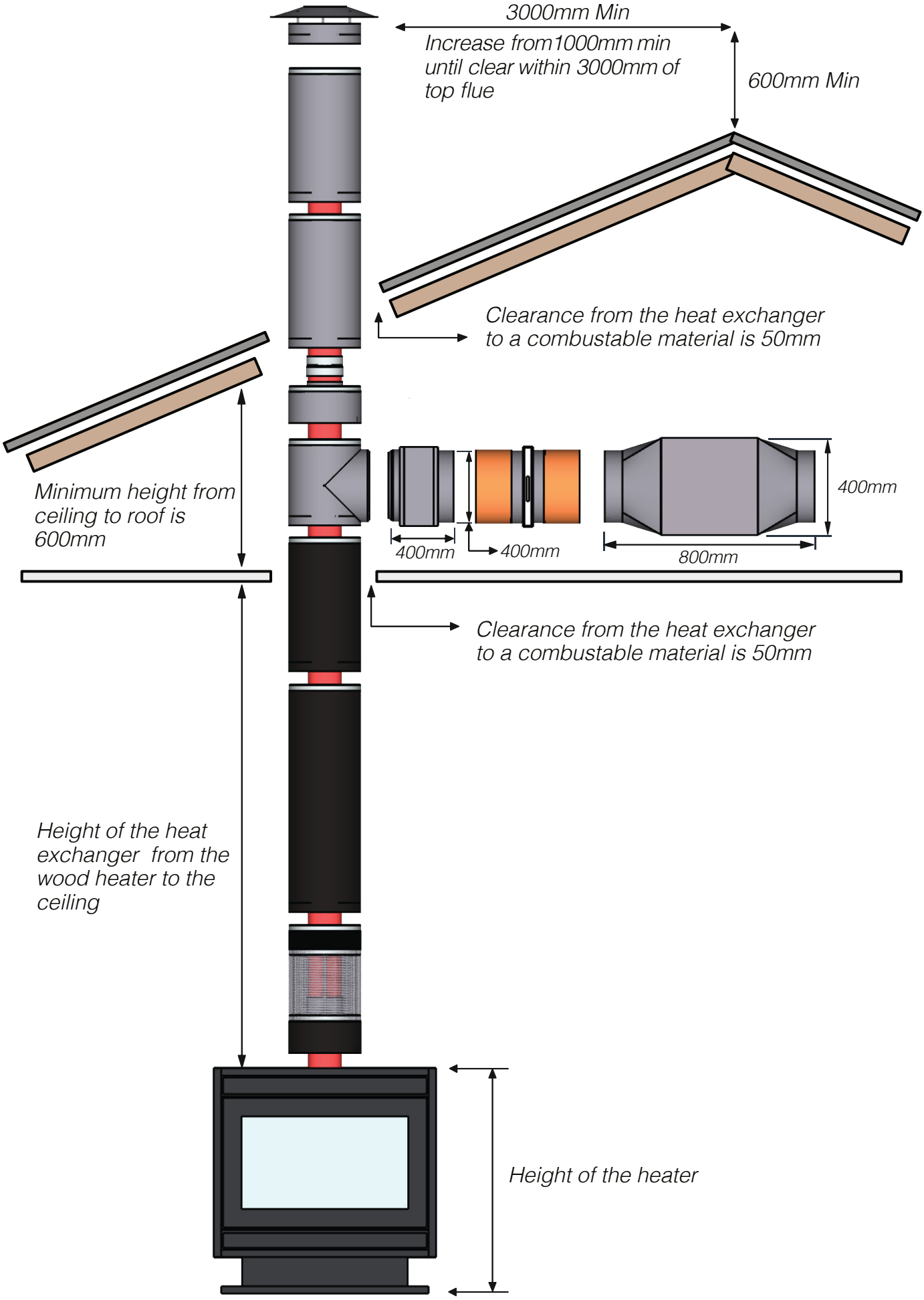
3000mm Min
Increase from1000mm min until clear within 3000mm of top flue
600mm Min
Clearance from the heat exchanger to a combustable material is 50mm
Minimum height from ceiling to roof is 600mm
400mm
400mm
400mm
800mm
Clearance from the heat exchanger to a combustable material is 50mm
Height of the heat exchanger from the wood heater to the ceiling
Height of the heater

Turboheat

Turboheat - *Components/ Measurements*

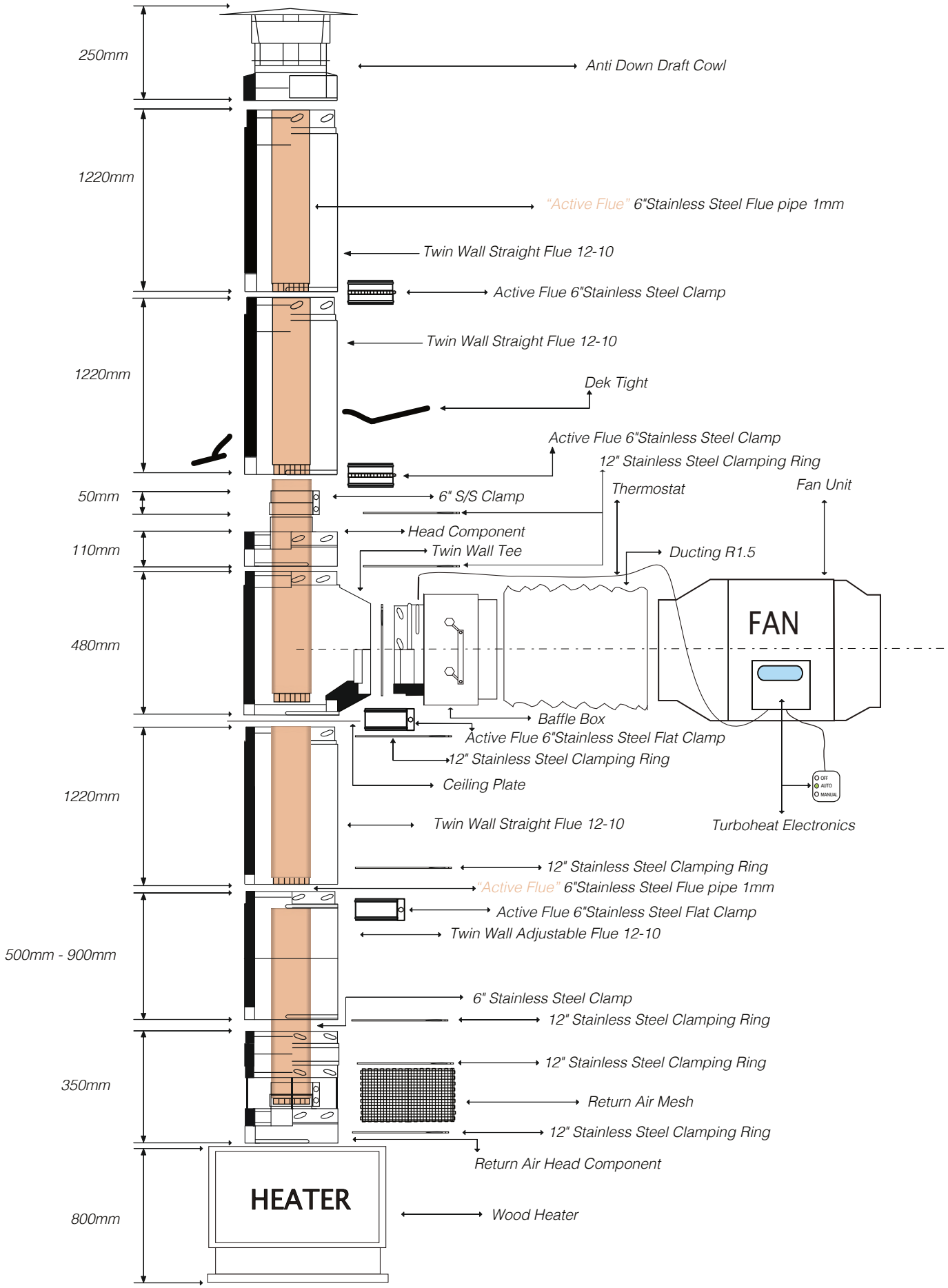

Turboheat

Turboheat - *Components/ Measurements*

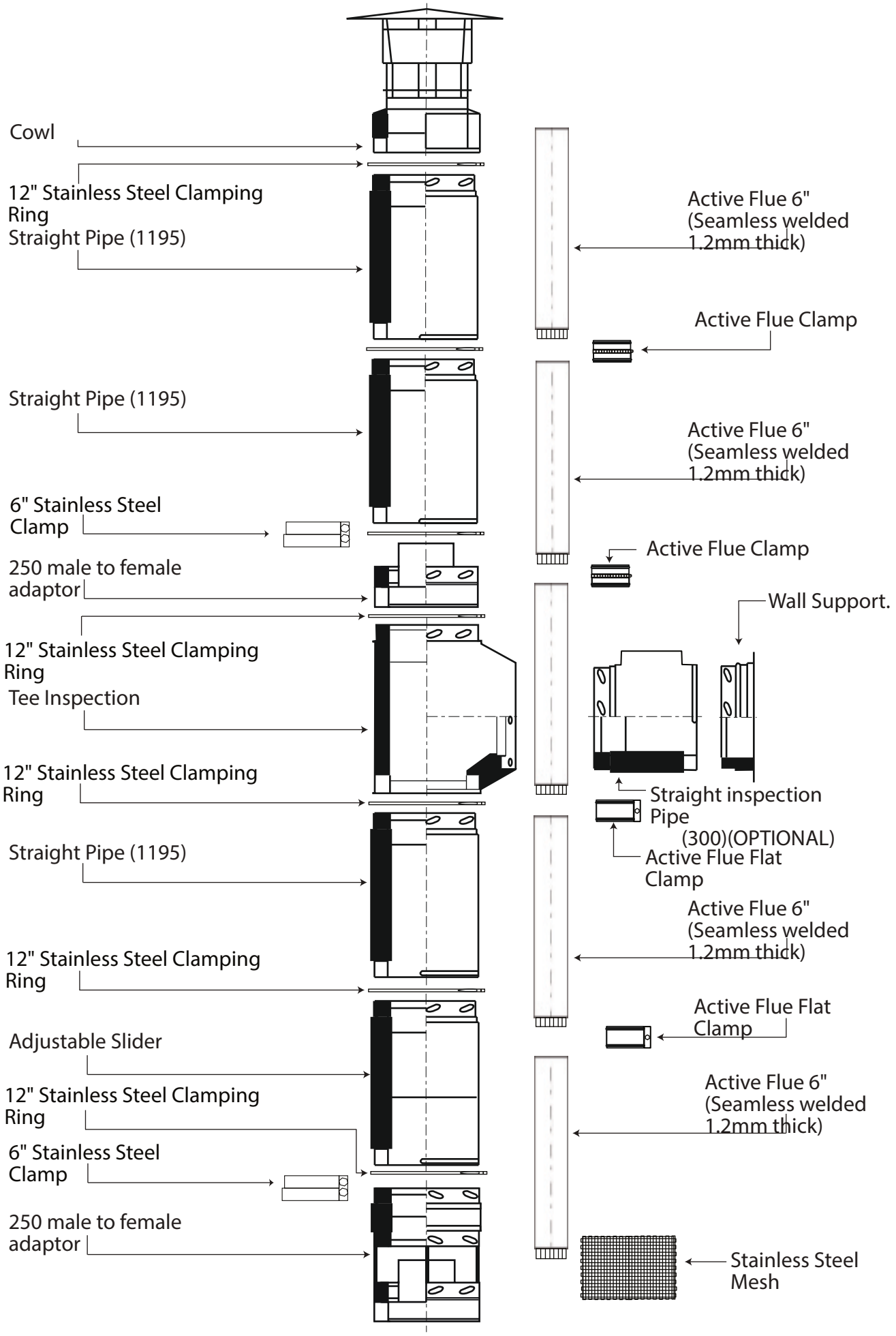

Turboheat

Turboheat - *Freestanding with Heights in Ceiling*

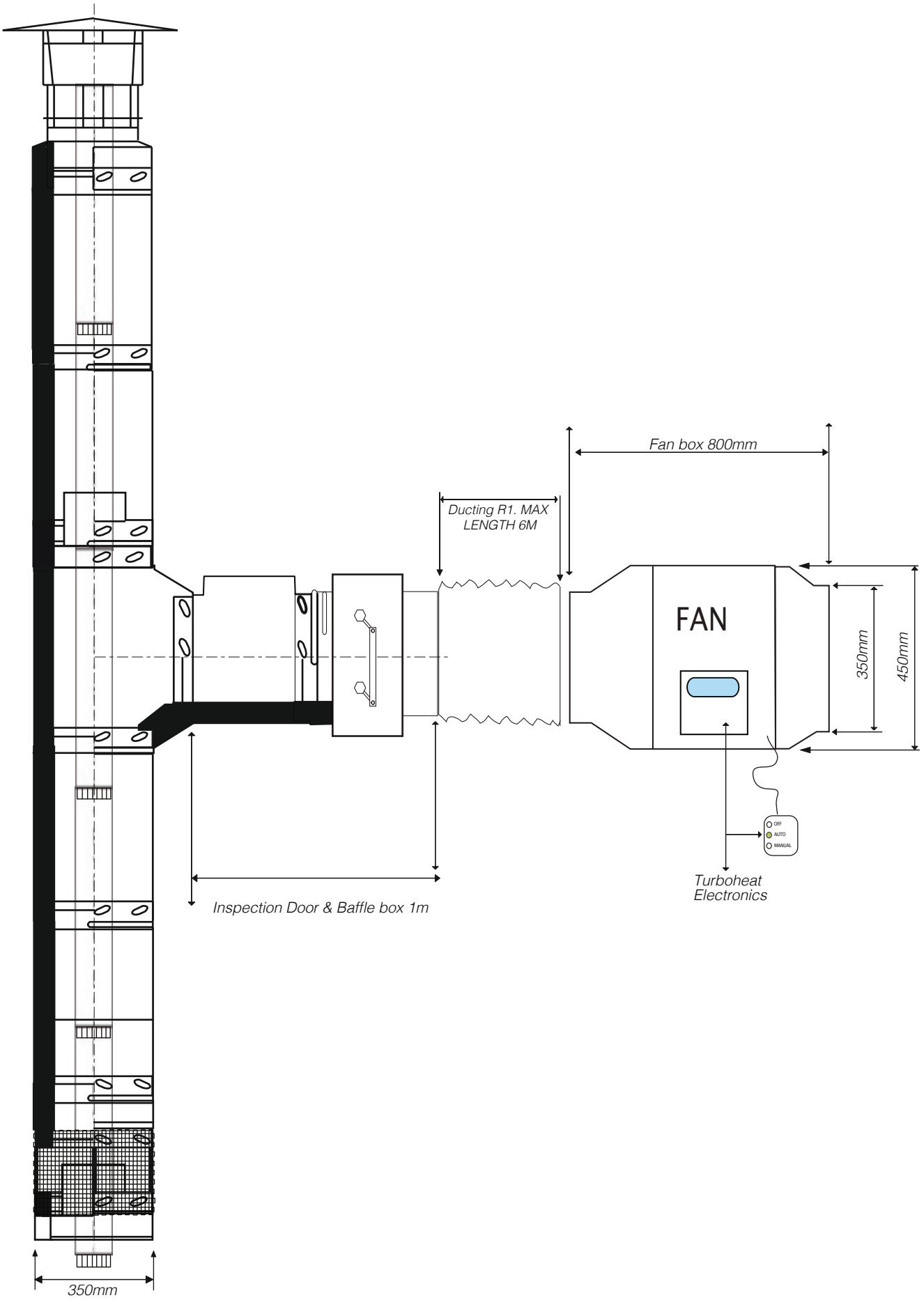

Turboheat

Turboheat - *Inbuilt With Zero Clearance Box*

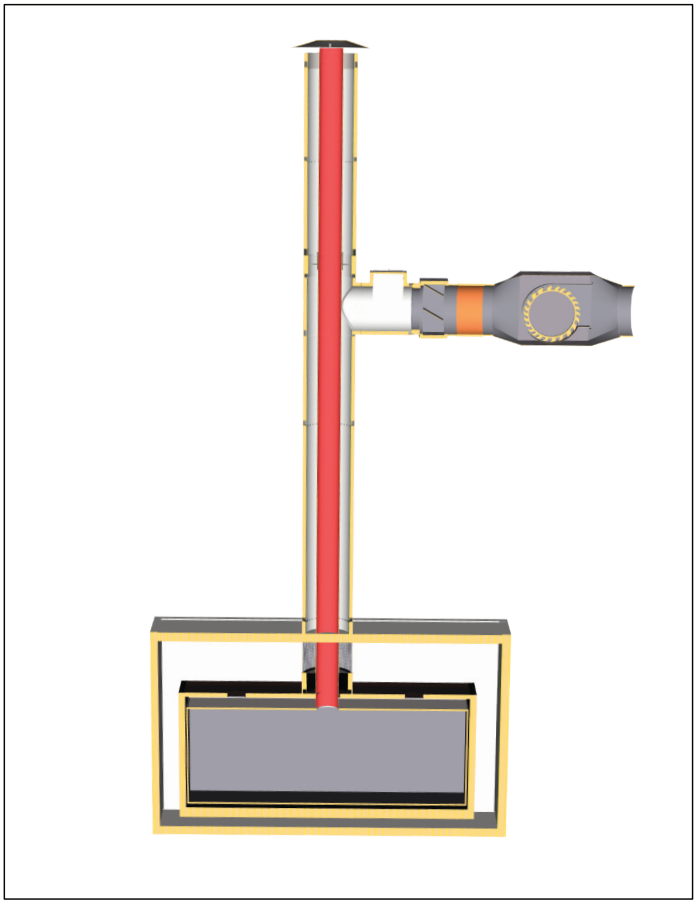

Turboheat - *Inbuilt with Zero Clearance Box*

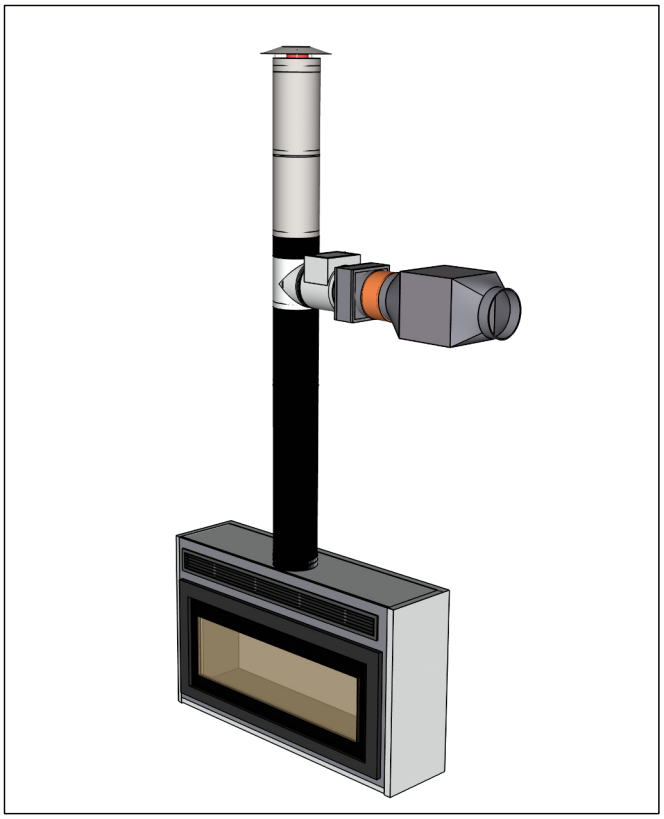

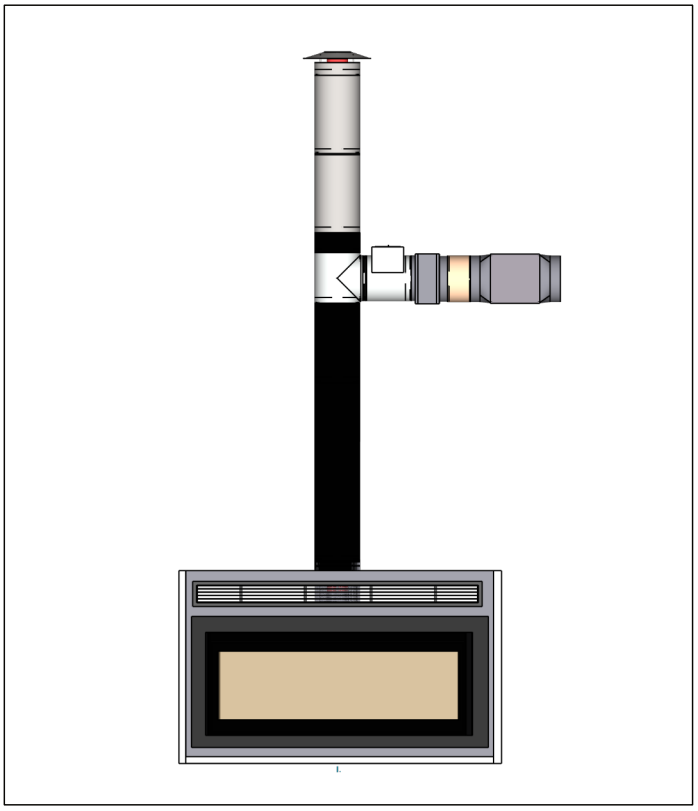

Turboheat

Turboheat - *Freestanding*

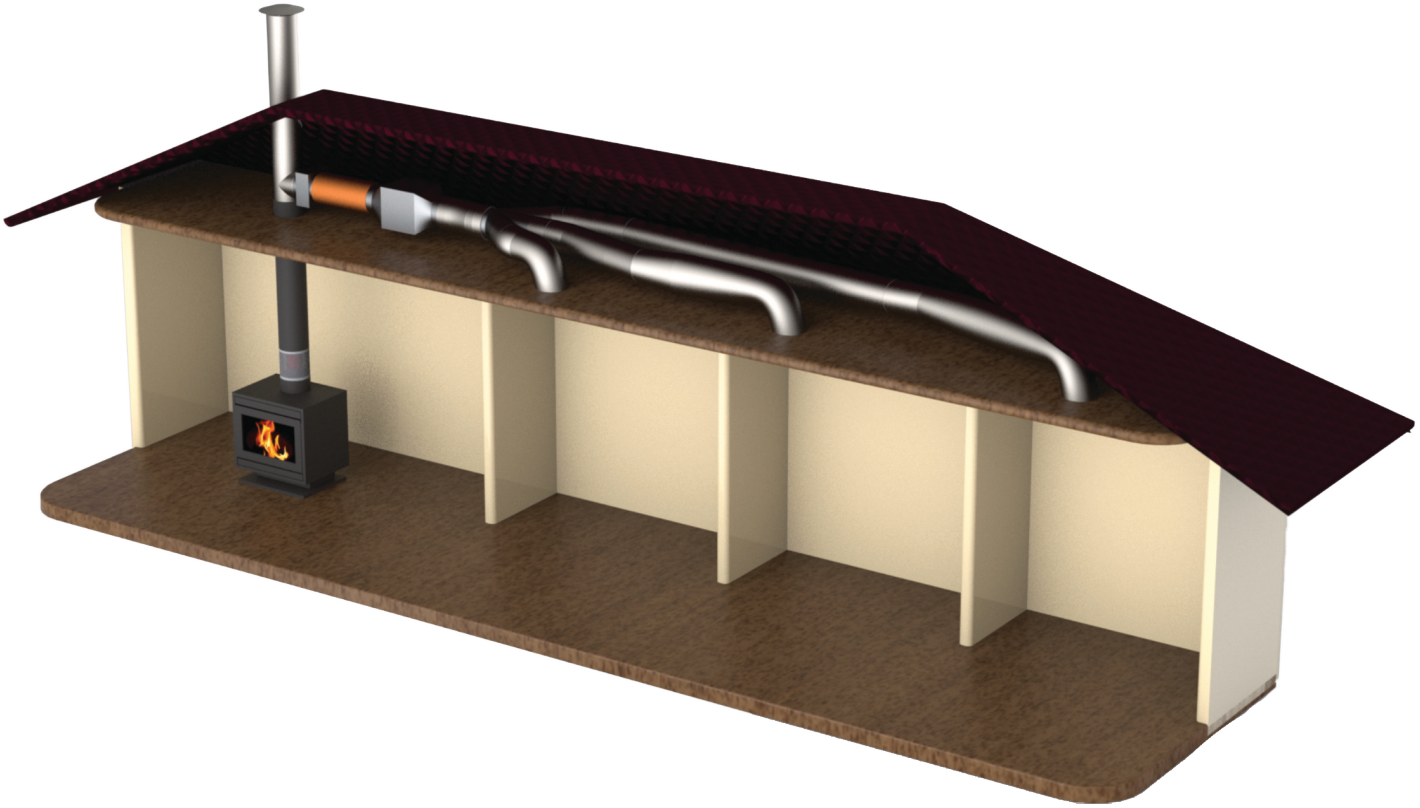

Turboheat - *Freestanding*

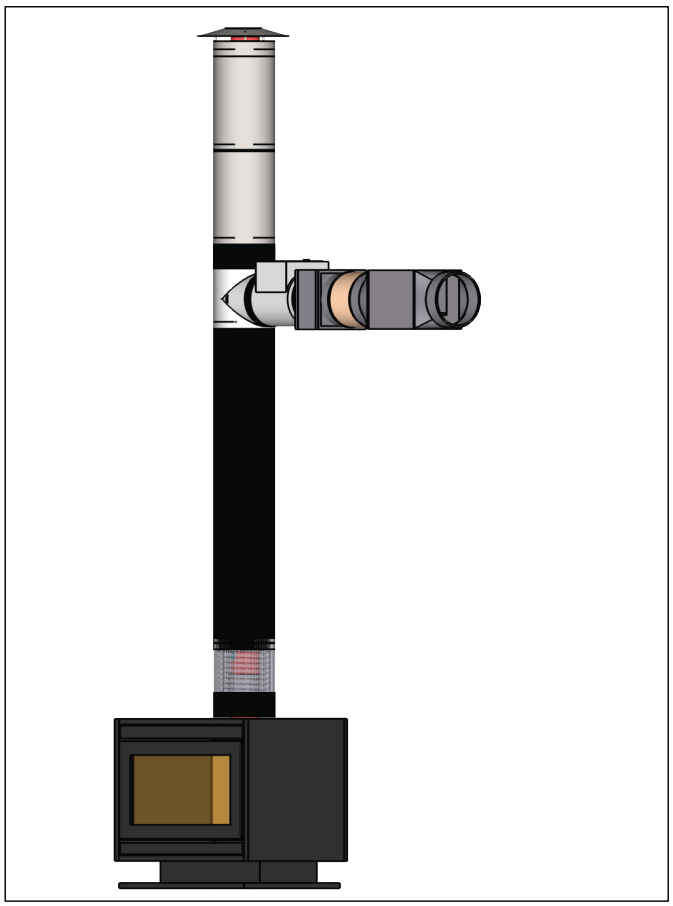

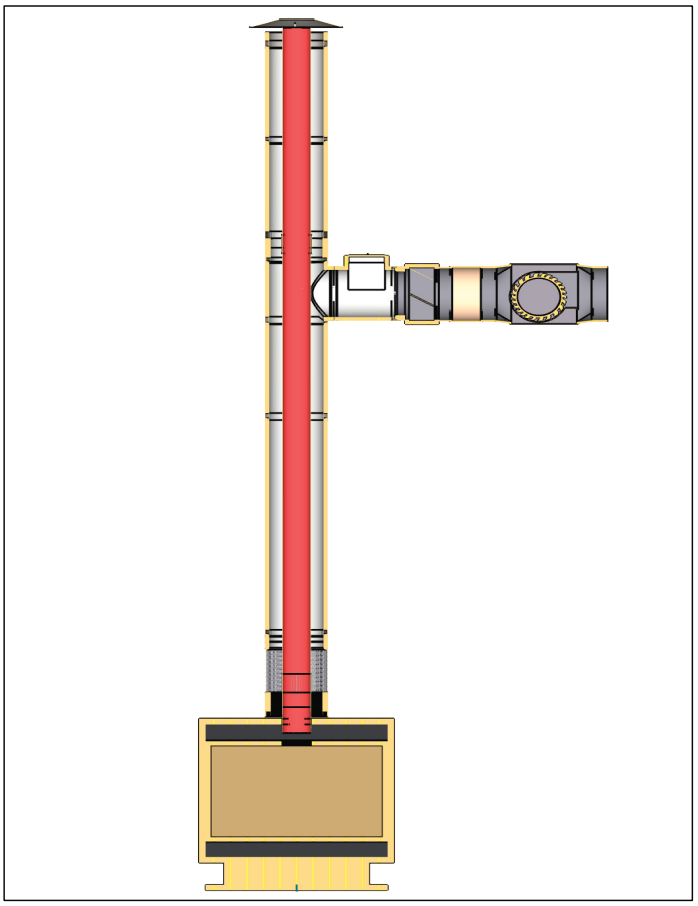

Turboheat

Turboheat - *Adjustable for rakes ceilings*

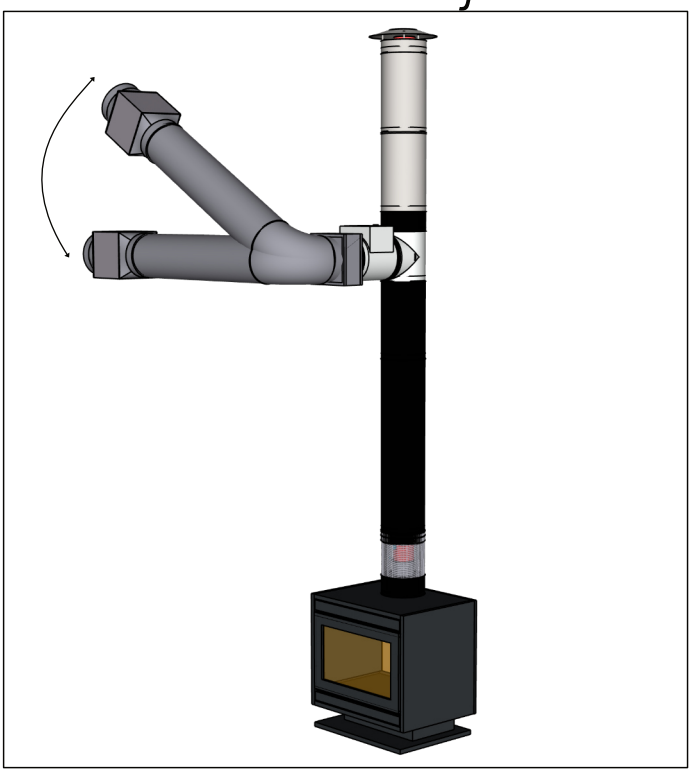

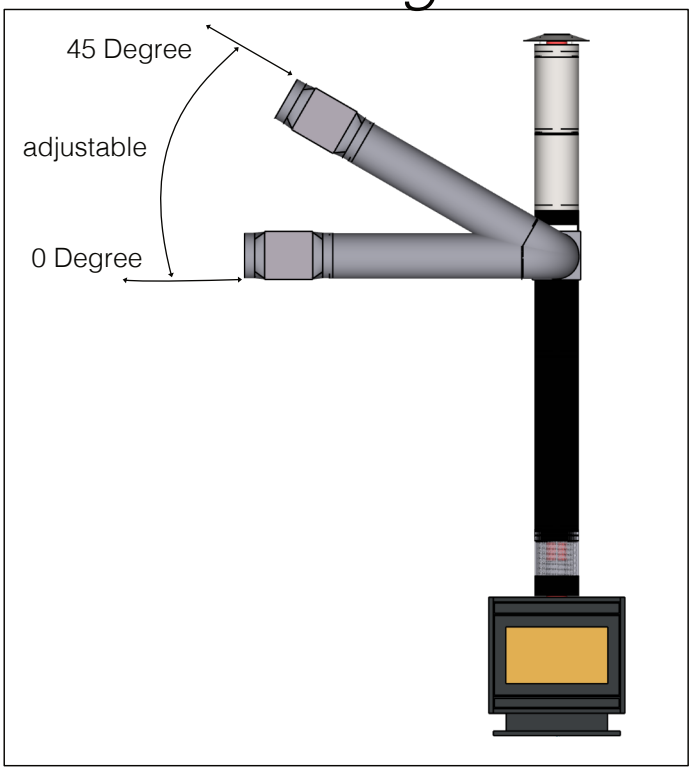

Turboheat - *Adjustable for rakes ceilings*

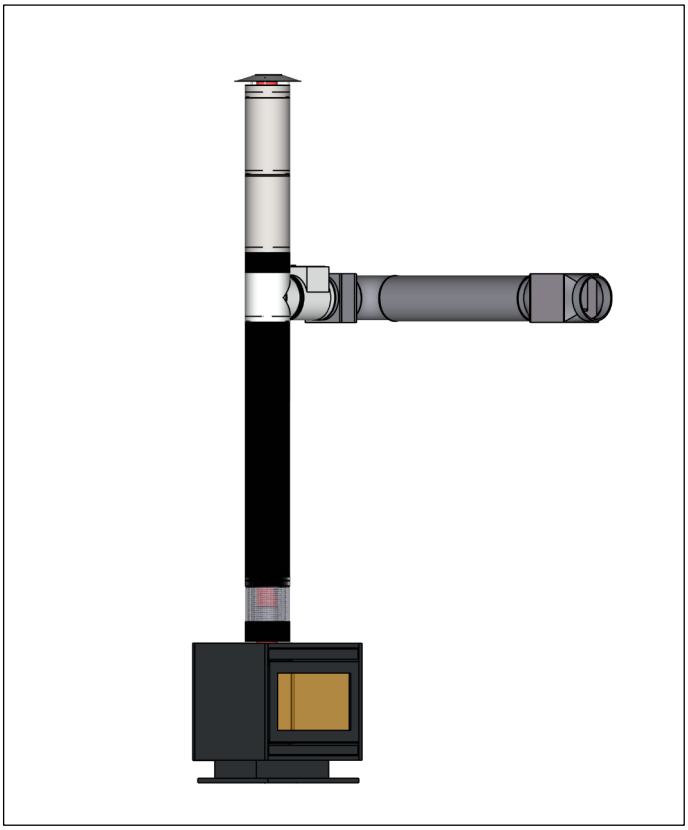

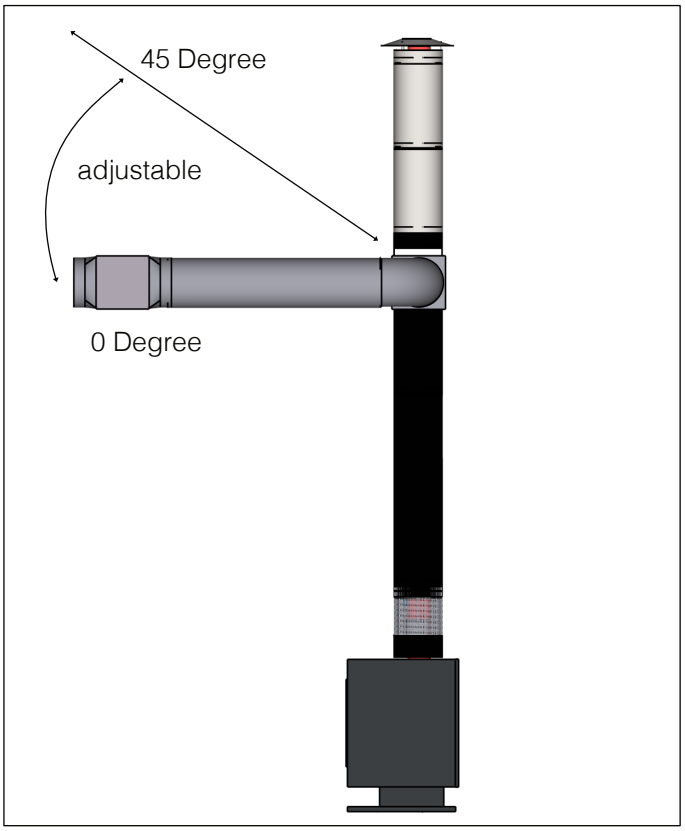

Turboheat

Turboheat - *Full Inbuilt* *(External Wall)*

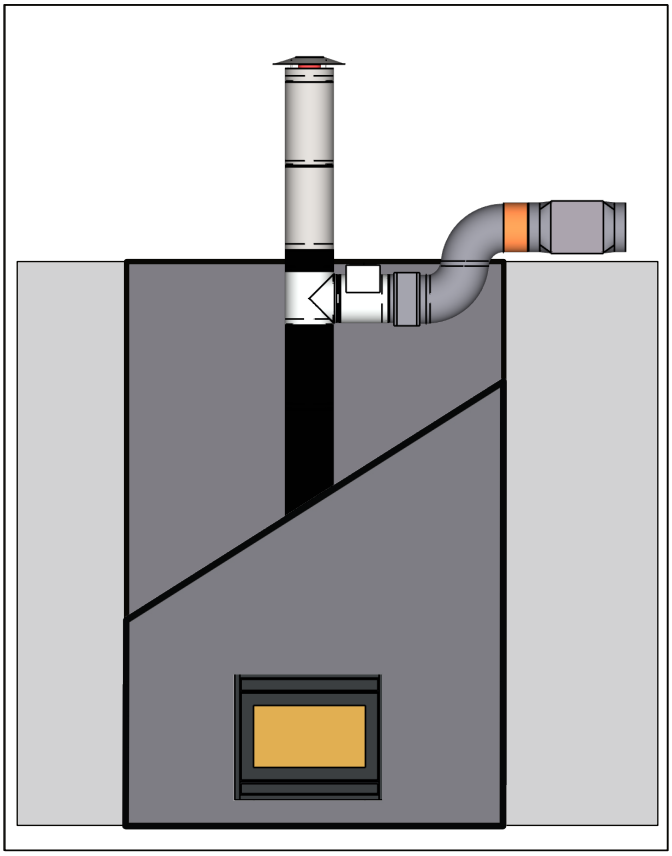

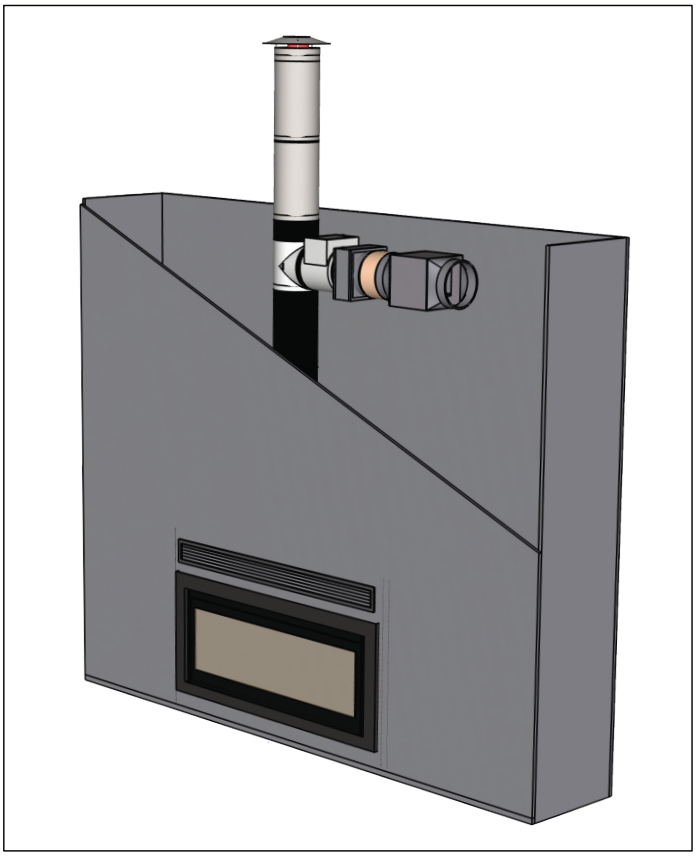

Turboheat - *Standard Inbuilt*

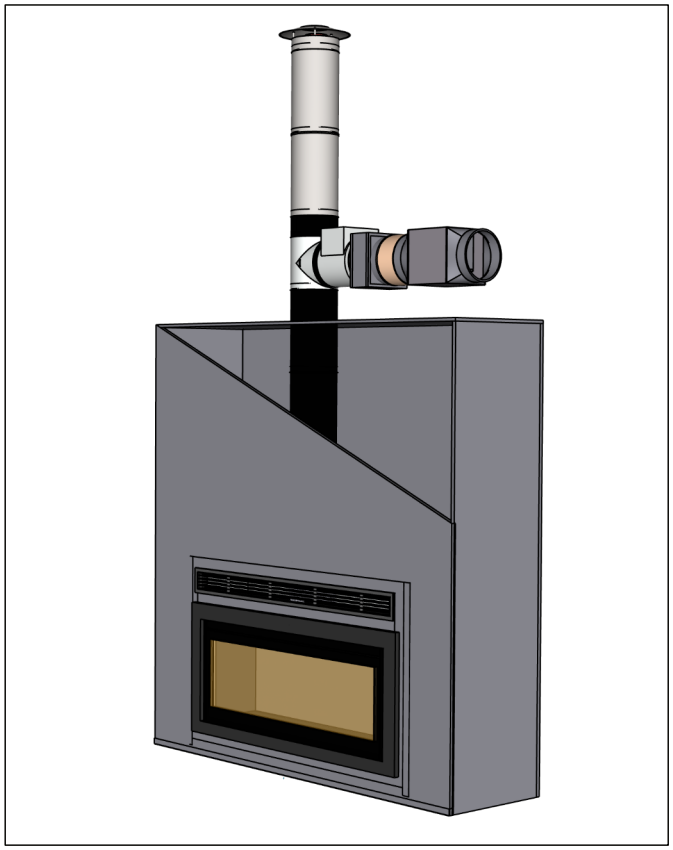

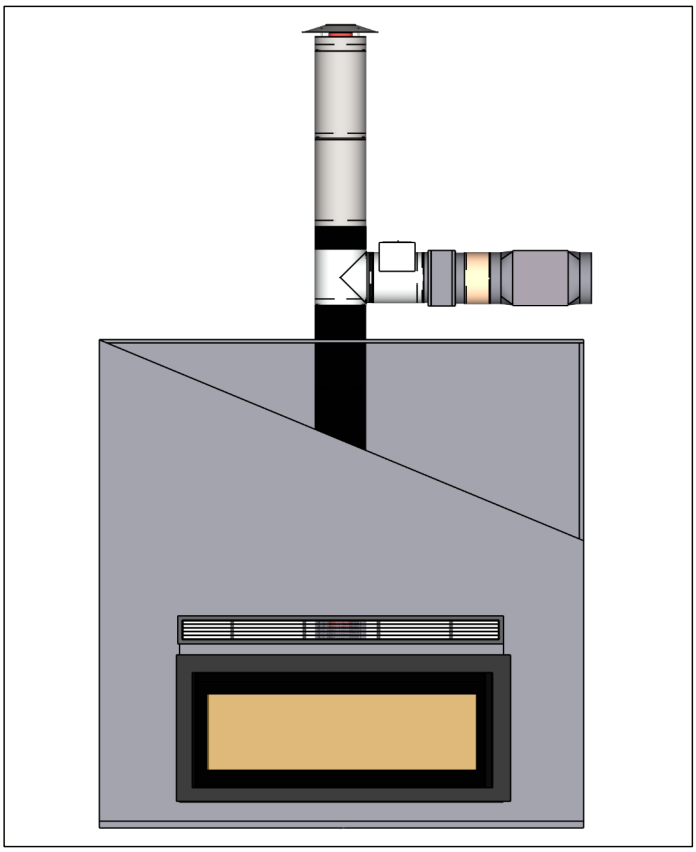

Turboheat

Turboheat - *Underground heating Inbuilt*

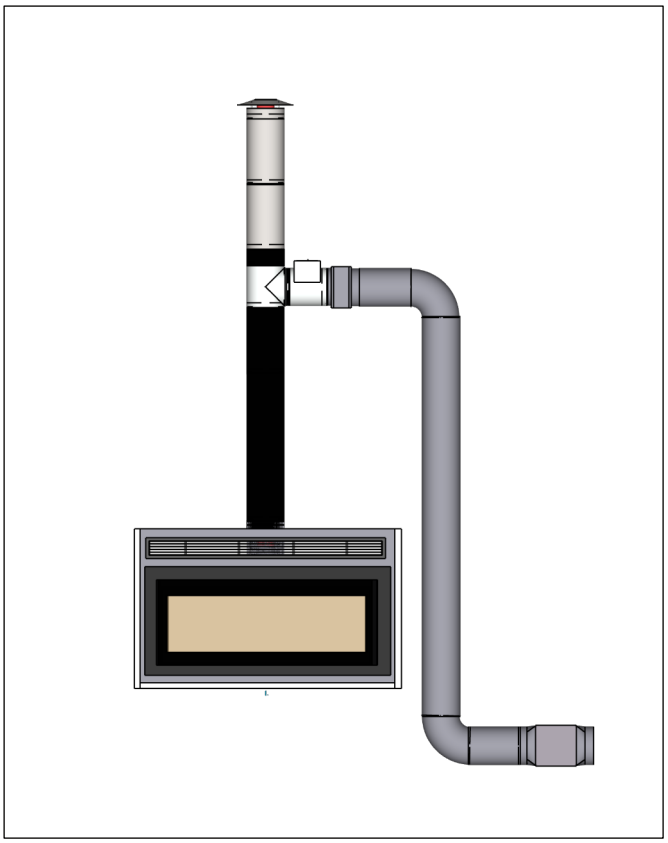

Turboheat - *Underground heating*

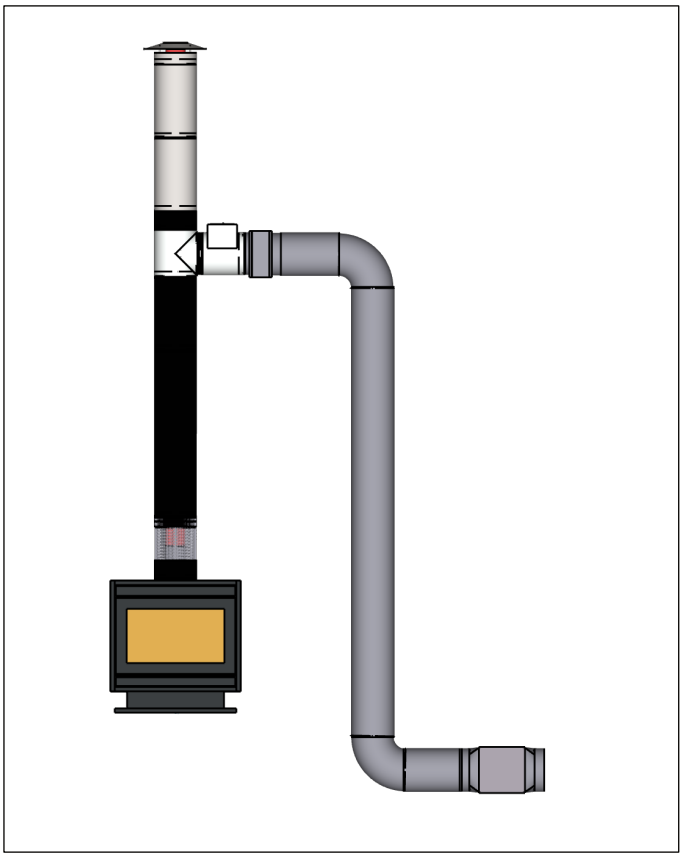

Turboheat

Turboheat - *3D Components Exploded View*

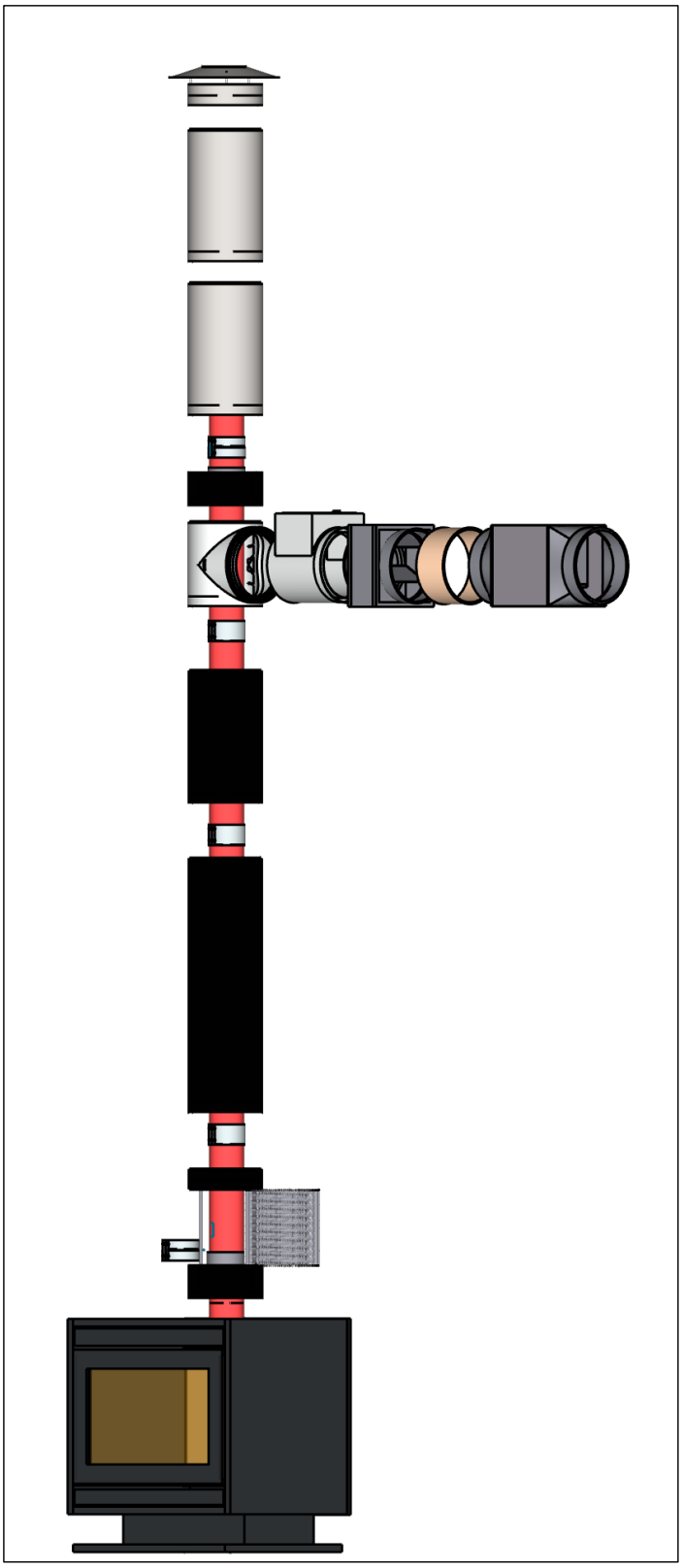

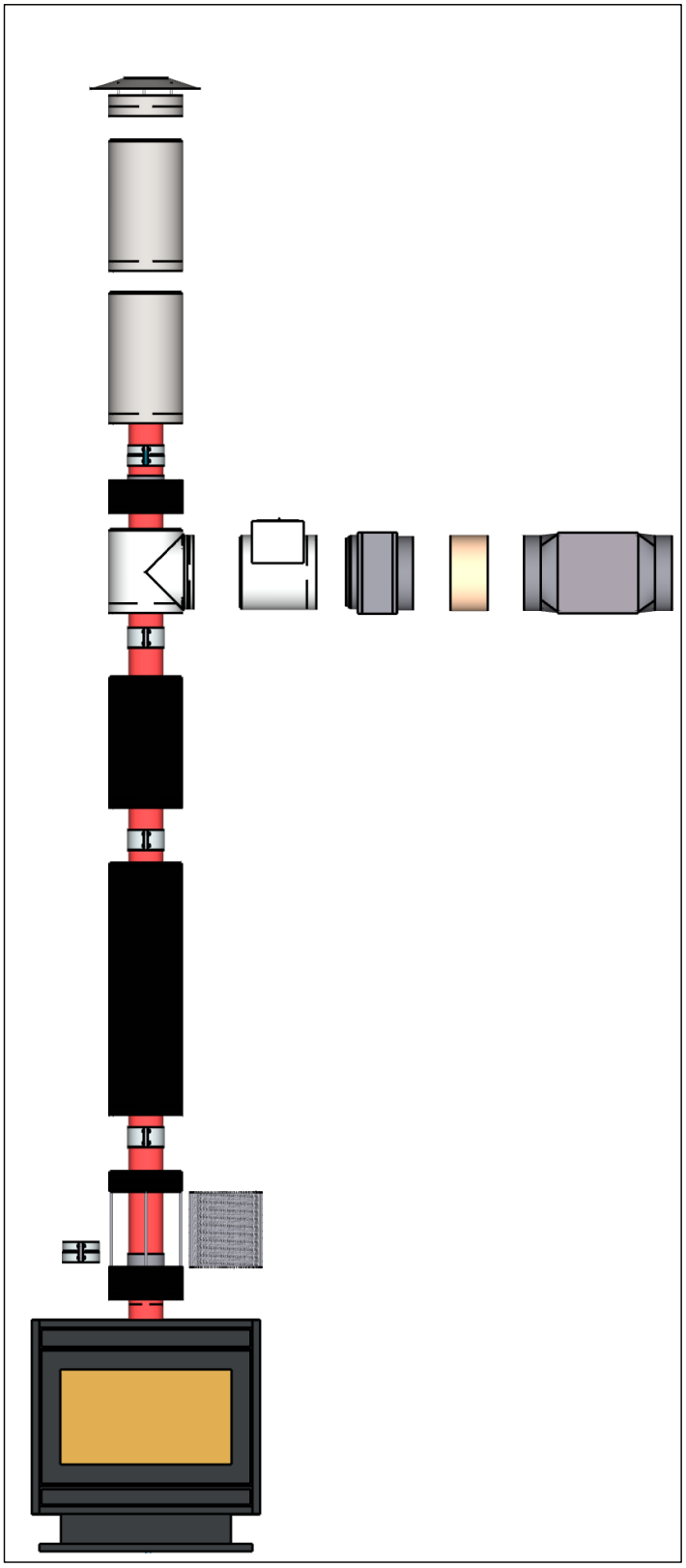

Turboheat

CODE TO ENTER INTO THE CONTROLLS ARE AS FOLLOWED.
1.Hold down the auto button with your left hand, 2. With your right hand enter in a code which is,
3. Arrow up, arrow down, arrow up, arrow up. 4. Then take all your fingers off all buttons.
5. To go to the next setting just push the auto button

Max fan speed is how fast you want the fan to go when it is going. Recommendation for this setting is between 50% to 85%.This all depends on the anount of ducts you have.

Auto cycle initial fan speed is at what speed you want the fan to start up at. For example if max speed is 70% make this one start up at 60%. best if it is always 5%-10% lower than max fan speed setting. This alows the fan to slowely ramp up to the speed you want.

Auto cycle update intervals is when the fan/electronics will take a sample update on the temperature. This reading is then relayed back telling the fan/ electronics wheather to speed up or slow down. Recommendation is every 2 mins

Auto cycle trigger temperature is the desired temperature you want the fan to commence. (providing there is a sufficent amount of heat within the system before starting the fan up). 70-80 degrees is recommended.

Auto cycle target temperature is the range you want to fluctuate the fan speed around. We recommend around 35-38 degrees.

Auto cycle stop temperature is for the temperature you wish to stop the fan at. This is vital because it allows the turboheat system to stop running and reheat. We recommend between 30 - 34 degrees.

THESE SETTINGS ARE ONLY IF YOU HAVE A DAMPER.
(Just push accept till you are back to the start if you dont have one)

Just push accept

Damper open temperature is the temperature you want to the damper flap to open. This allows the room temperature air to mix in with the turboheat heated air, allowing the air tomix to the right temperature. Recommend 5 degrees more than your trigger temperature

Damper close hysteresis is the degrees it will close the damper. For example if thetrigger temperature is 60 degrees than the damper open temp is 65. The difference between the 2 is 5% fo the close Hysteresis is 5%

Turboheat

Turboheat - *6 Duct Package*

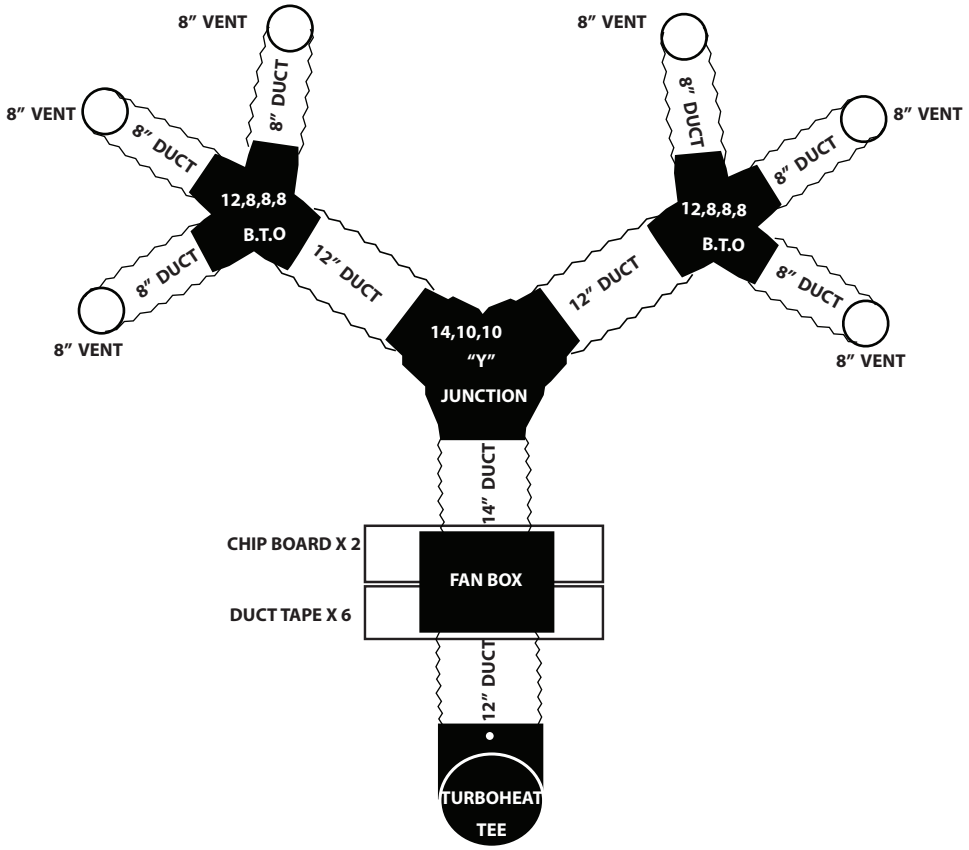

Turboheat - *8 Duct Package*

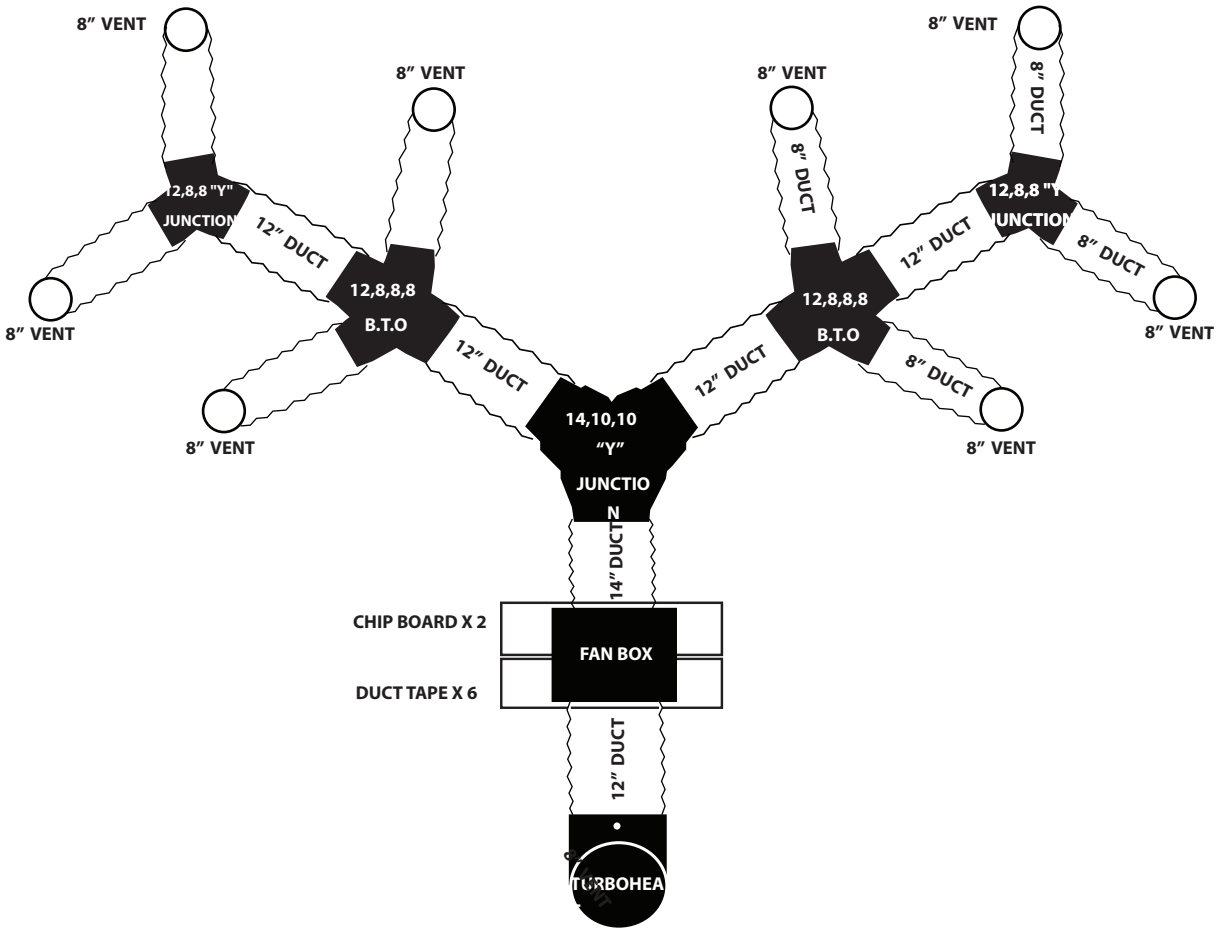

Turboheat

Turboheat - *9 Duct Package*

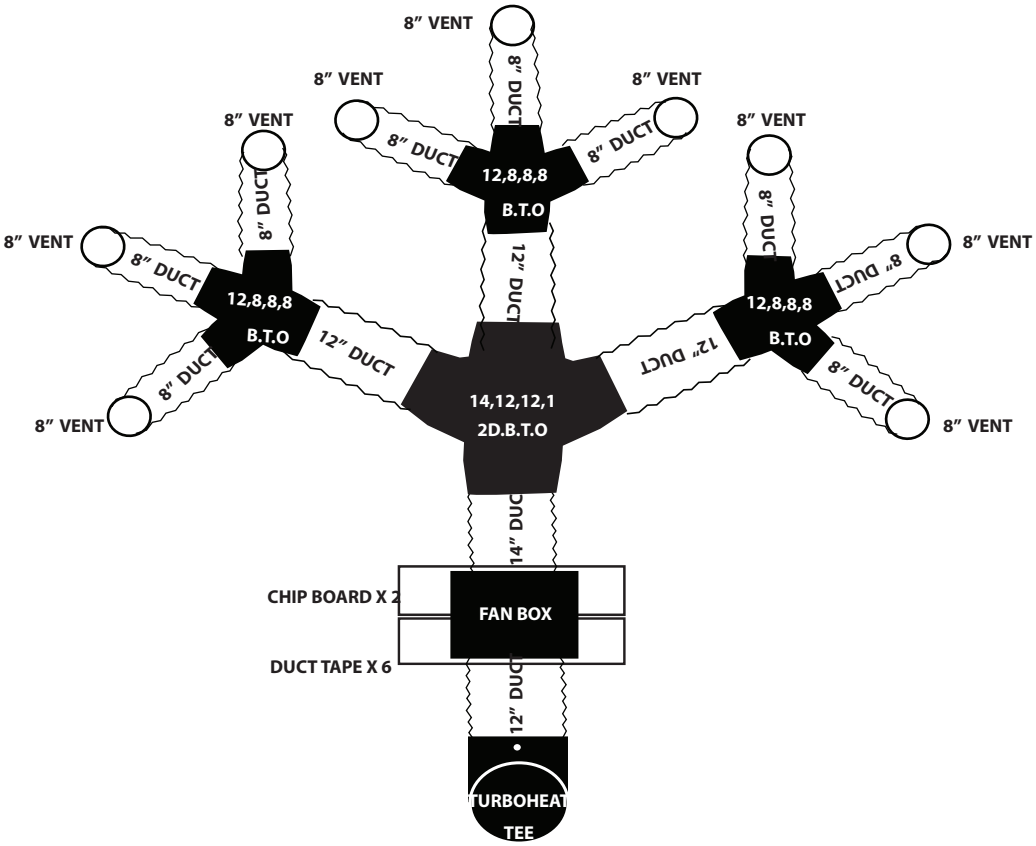

Turboheat - *10 Duct Package*

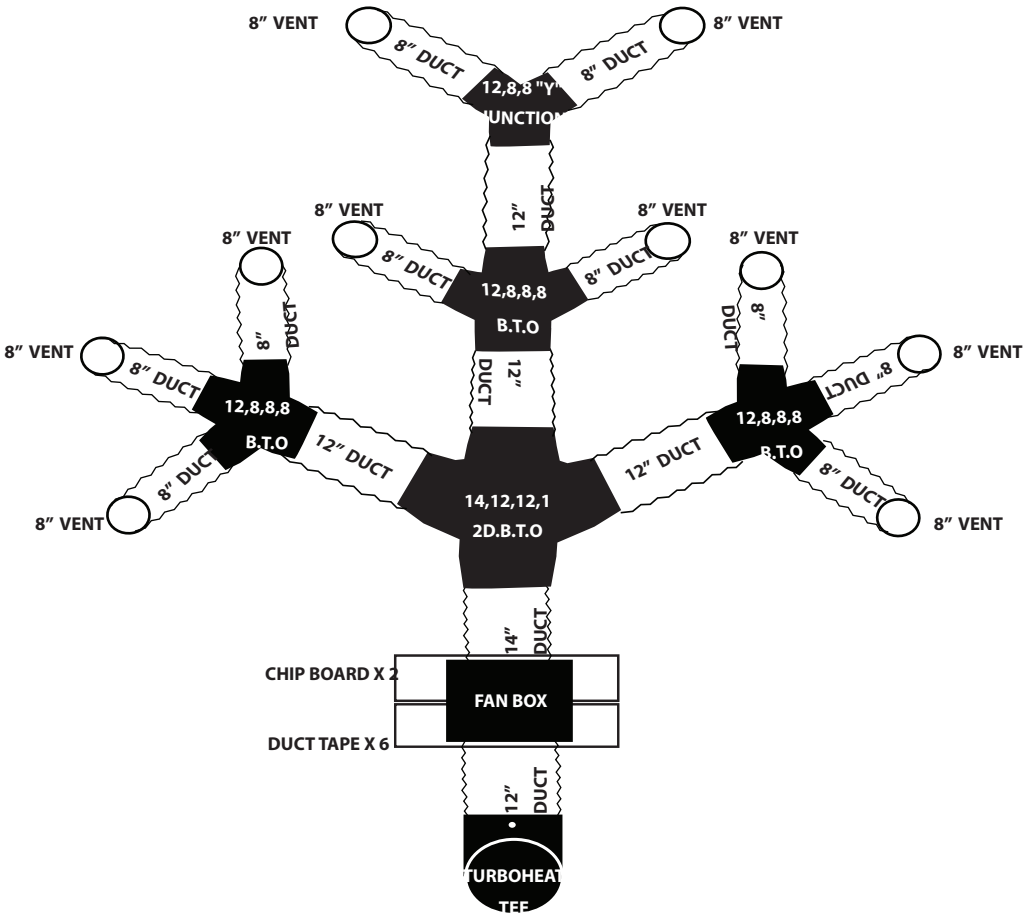

Certificate of Compliance

for

SOLID FUEL HEATERS

This is to certify that the Flue System stated on this certificate has been tested for Thermal Clearances in accordance with the Australian / New Zealand Standard(s) detailed below

Manufacturer	**Turbo Heat**
Make	**Turbo Heat**
Model	**Heat Exchanger flue System**
Category	**Flue System**
Test Report No	**ASFT20035-1**
National Standards	**AS/NZS 2918 – Appendix F (2018)**

ASFT hereby grants to:

Turbo Heat

of

Factory 3, 2 Glenville Drive, Melton VIC, Australia, 3337

Certificate No.:	**ASFT20C070**	Certified Date:	**8 September 2020**
Issue Date:	**8 September 2020**	Expiry Date:	**29 June 2028**

Steve Marland

Managing Director of ASFT

ASFT performs compliance testing of Solid Fuel Appliances to the relevant Australian/New Zealand standards. This certification is subject to the conditions set forth in the characteristics above and is not to be construed as any recommendation, assurance or guarantee by ASFT of the product acceptance by Authorities having jurisdiction.

Australian Solid Fuel Testing, 3 Garden Street, Morwell, Victoria, Australia 3840
ABN 46 610 154 768

Turboheat
Wood fire ducted heating

Notes